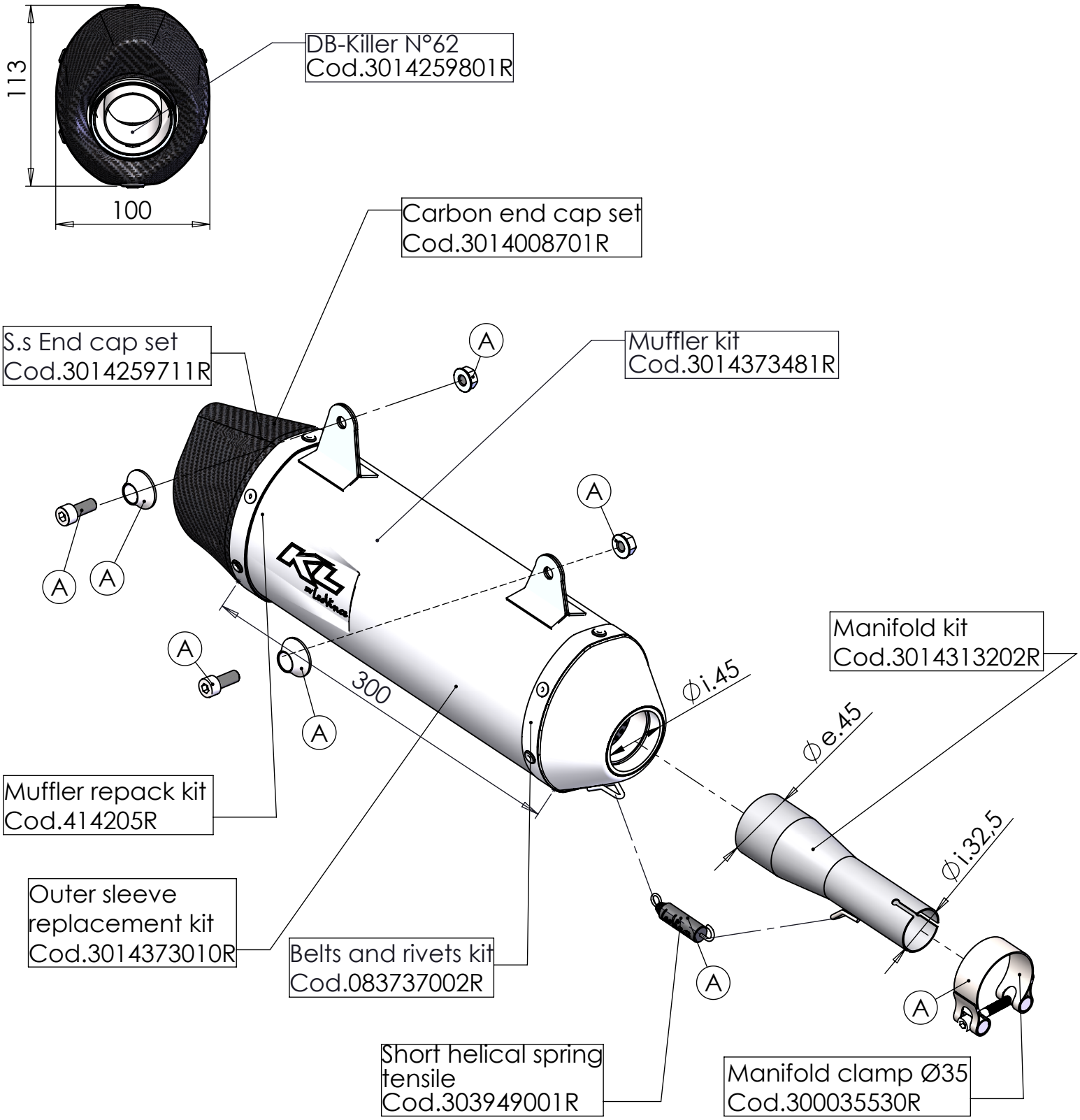

ART. LV680560K SPARE PARTS

KL KXE 125 MOTARD
KL KXE 125 ENDURO

Ⓐ FITTING KIT Cod. 3014313601R