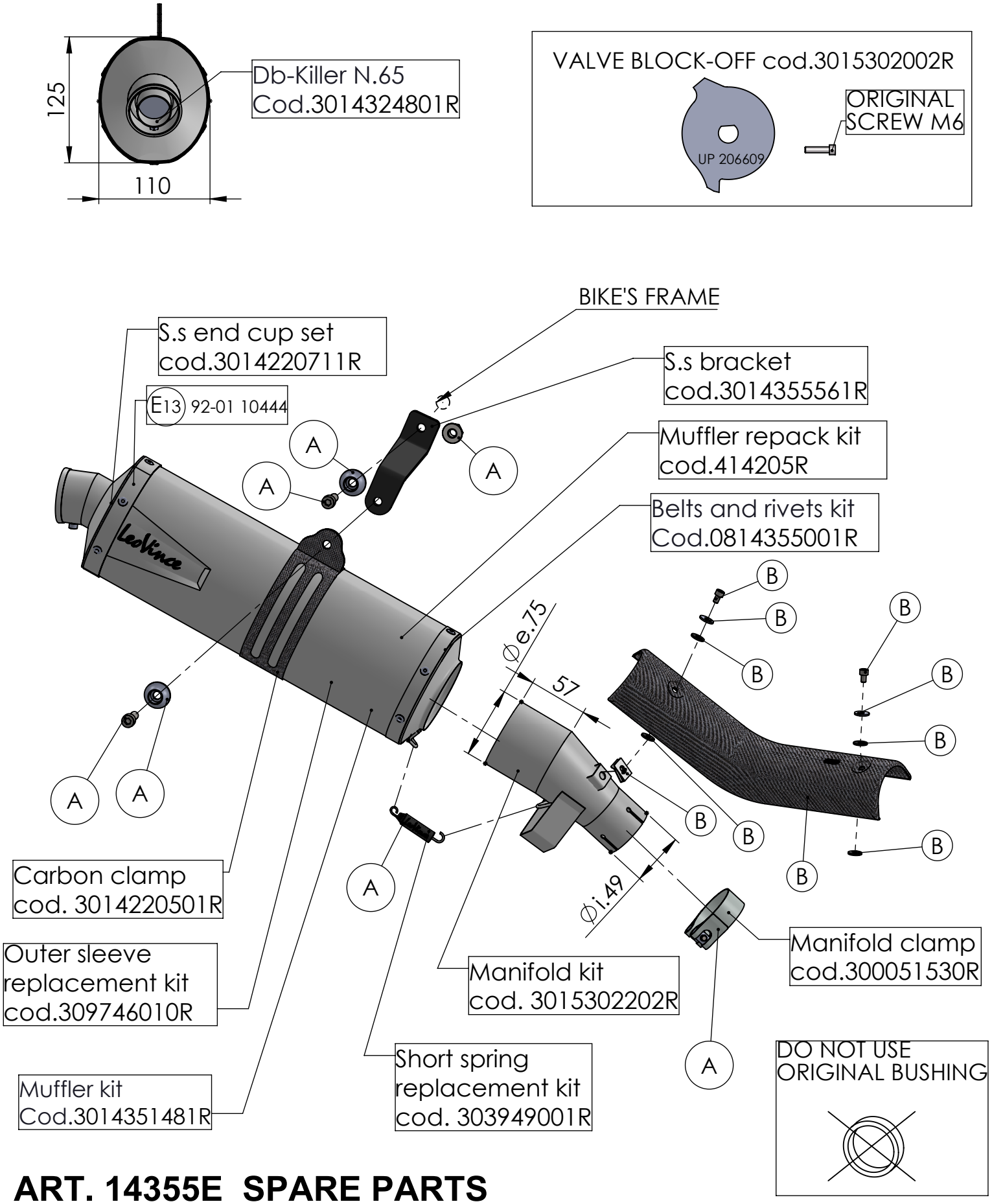

ART. 14355E SPARE PARTS

HONDA CRF 1100 L AFRICA TWIN/ADVENTURE SPORT/DCT
(fits with original panniers)

Ⓐ FITTING KIT cod. 3014355601R
Ⓑ CARBON COVER KIT cod. 3015302001R