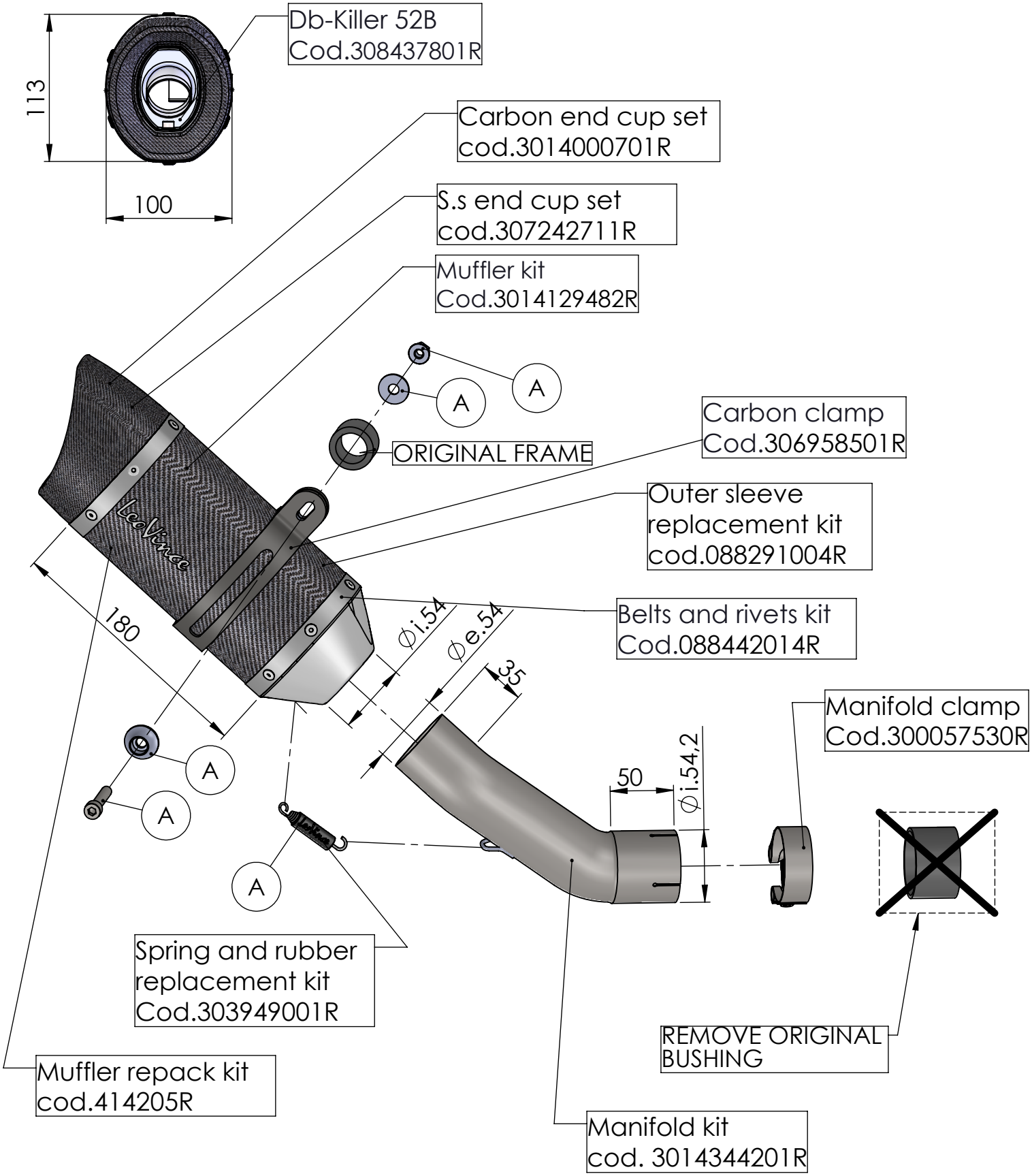

ART. 14344E SPARE PARTS

KAWASAKI Z H2 1000

Ⓐ FITTING KIT cod.3014344601R