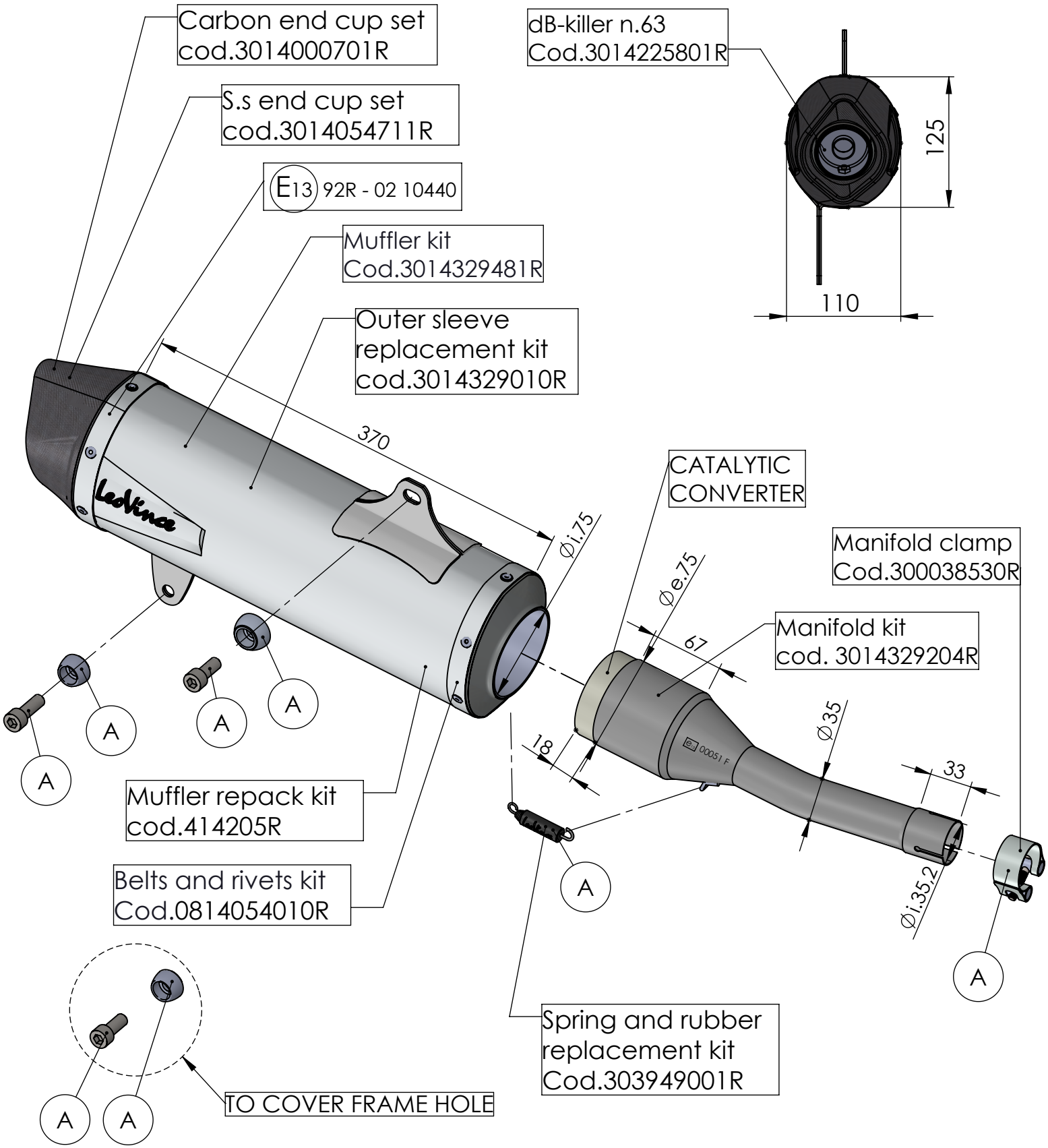

ART. 14329EK - SPARE PARTS

YAMAHA X-MAX 400

Ⓐ FITTING KIT cod.3014329601R