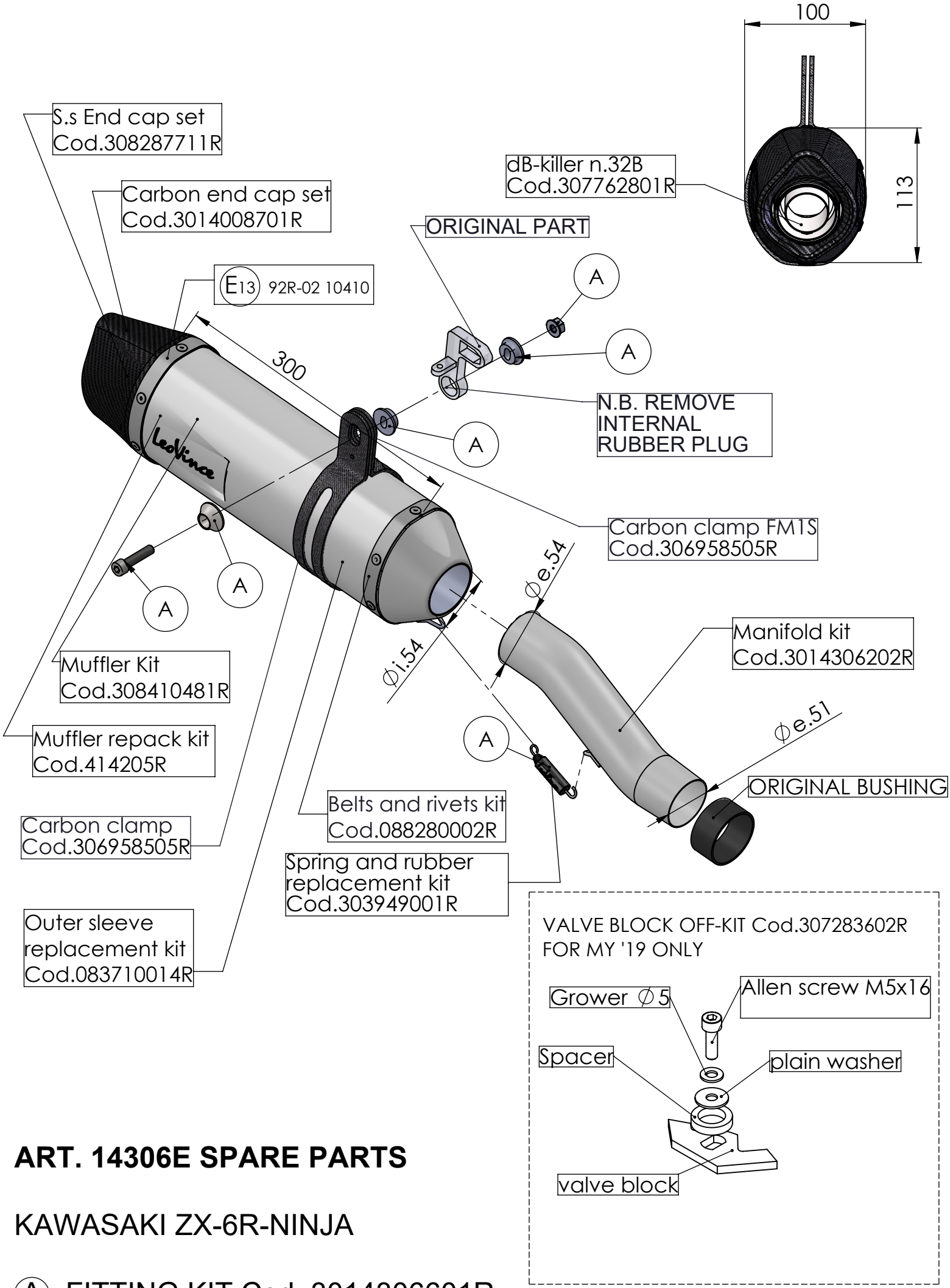

ART. 14306E SPARE PARTS

KAWASAKI ZX-6R-NINJA

Ⓐ FITTING KIT Cod. 3014306601R