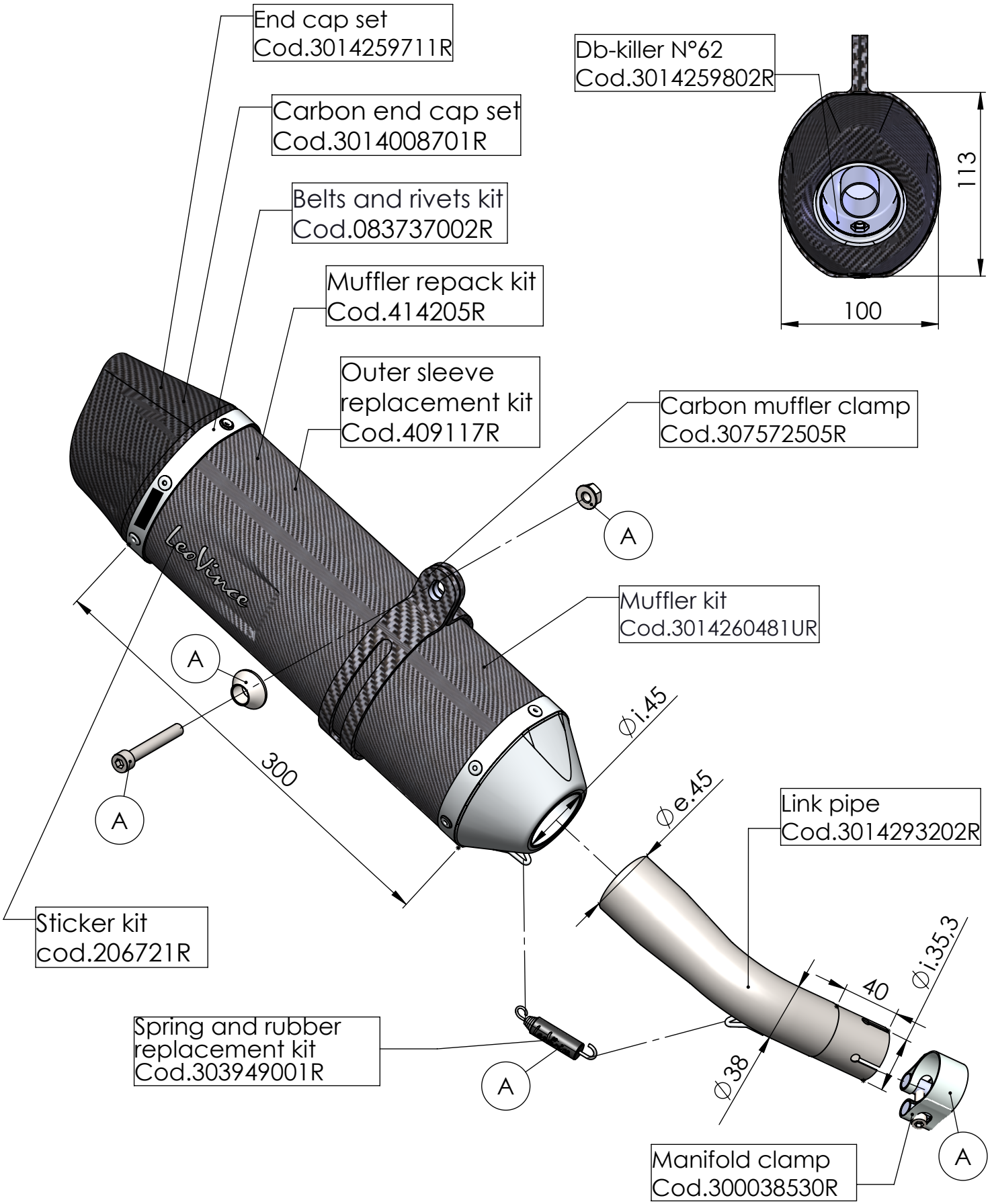

ART. 14294EU - SPARE PARTS

KAWASAKI NINJA 125 - Z 125

Ⓐ FITTING KIT Cod. 3014293601R