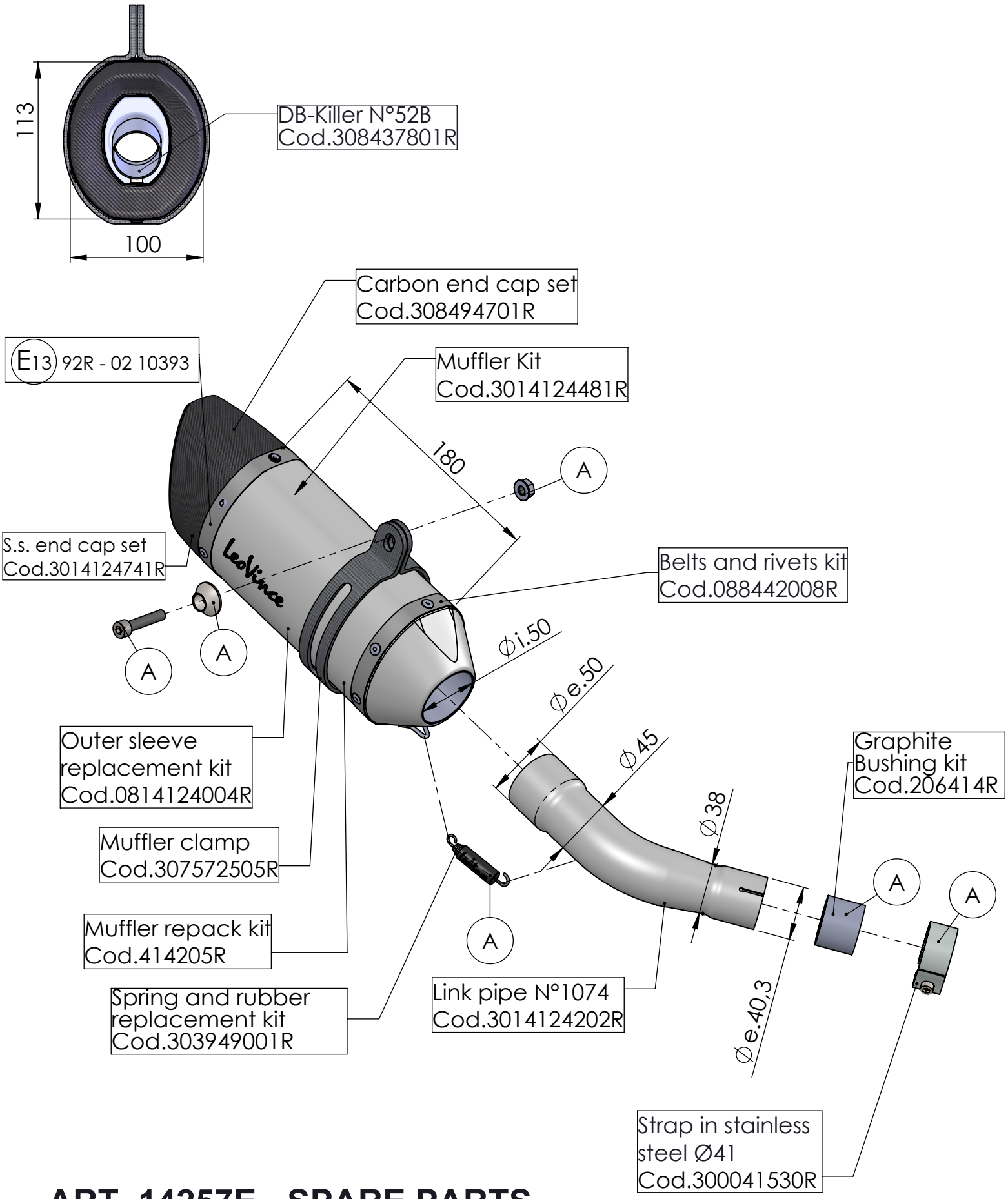

ART. 14257E - SPARE PARTS

YAMAHA YZF-R3 - MT-03

Ⓐ FITTING KIT cod.3014124601R