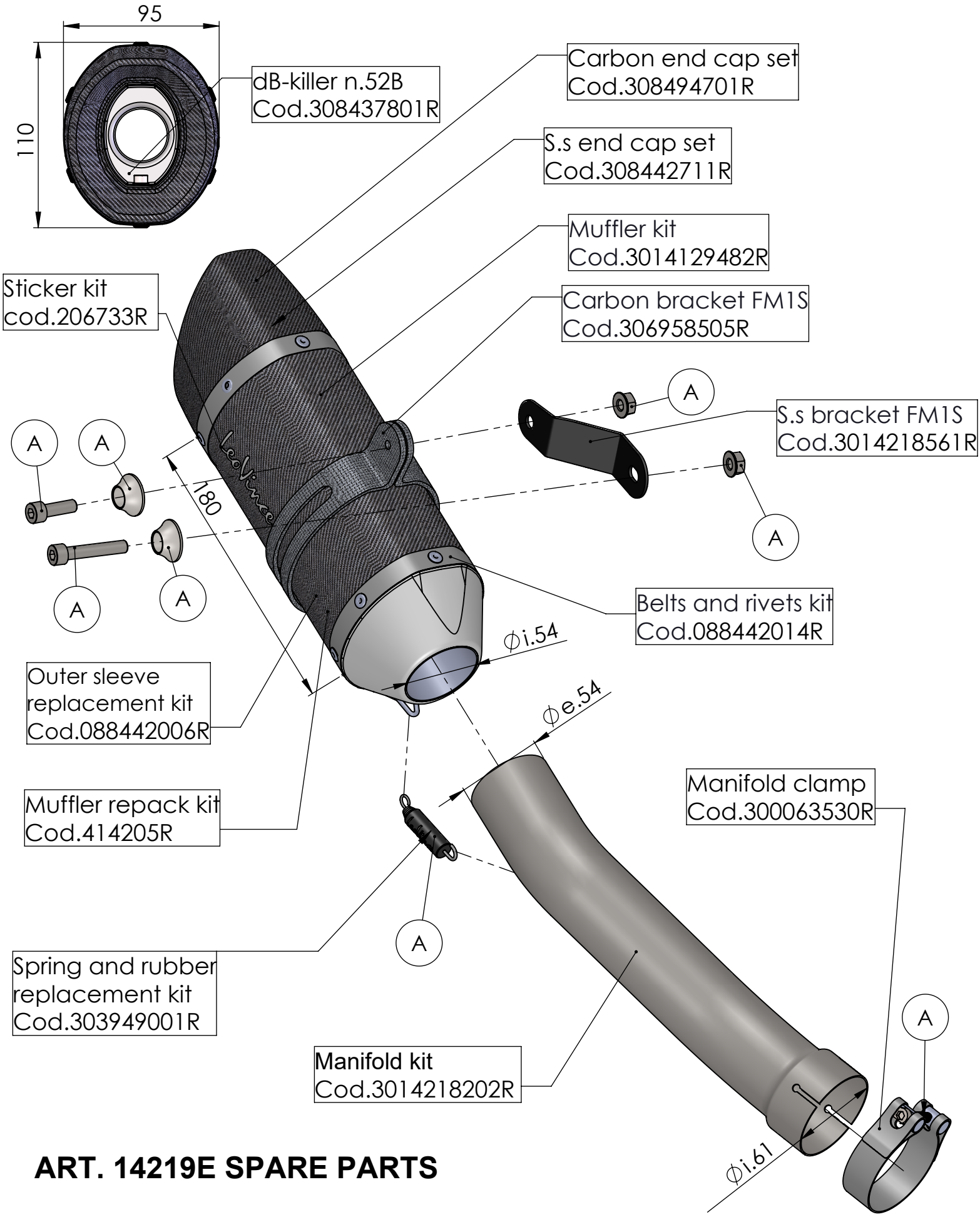

ART. 14219E SPARE PARTS

HONDA CBR 1000 RR FIREBLADE/SP/SP2

Ⓐ FITTING KIT Cod. 3014218601R