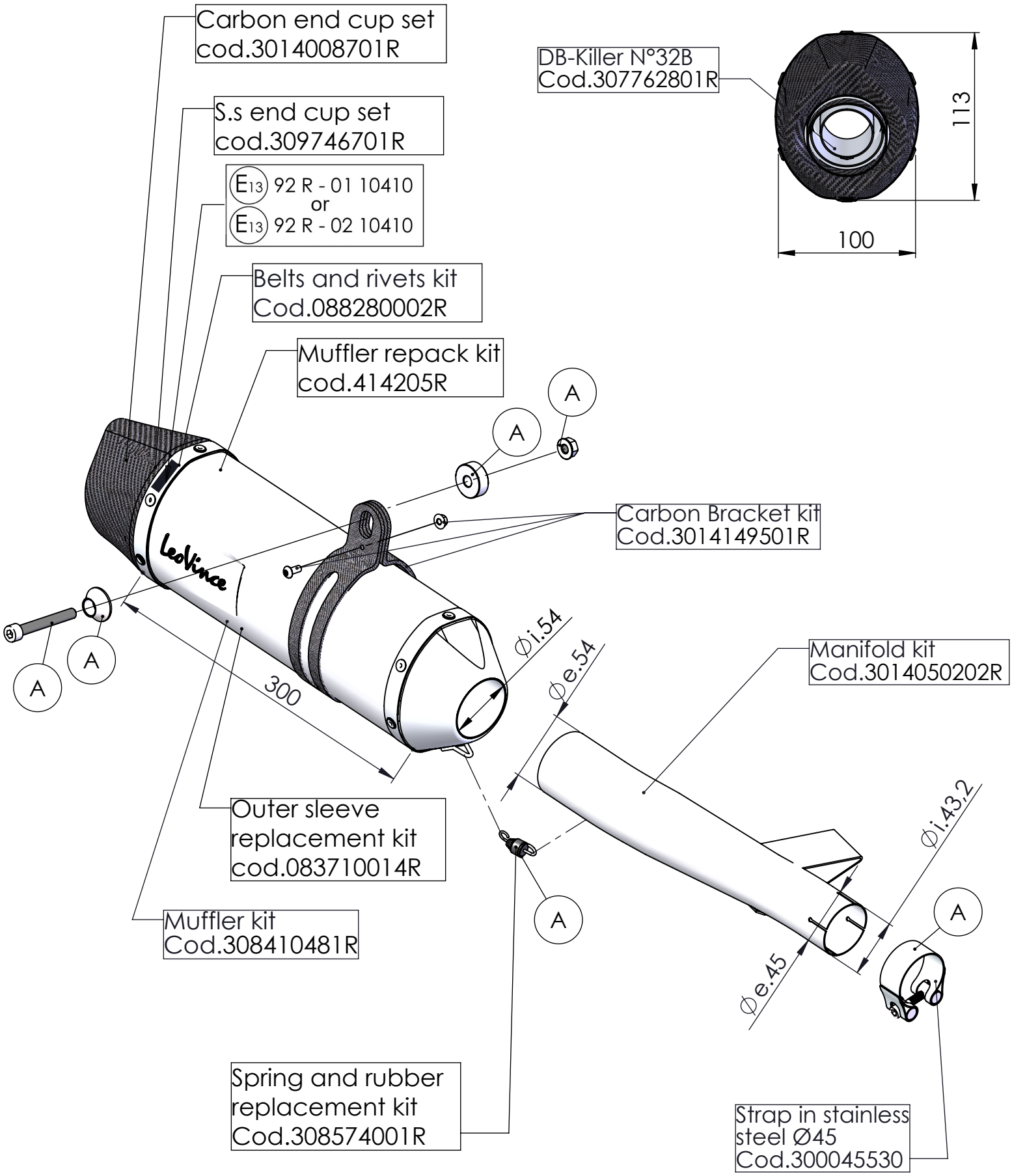

ART. 14210E SPARE PARTS

HONDA CB 500 F / CBR 500 R / CB 500 X
(fits with original centre stand)

Ⓐ FITTING KIT cod.3014034601R