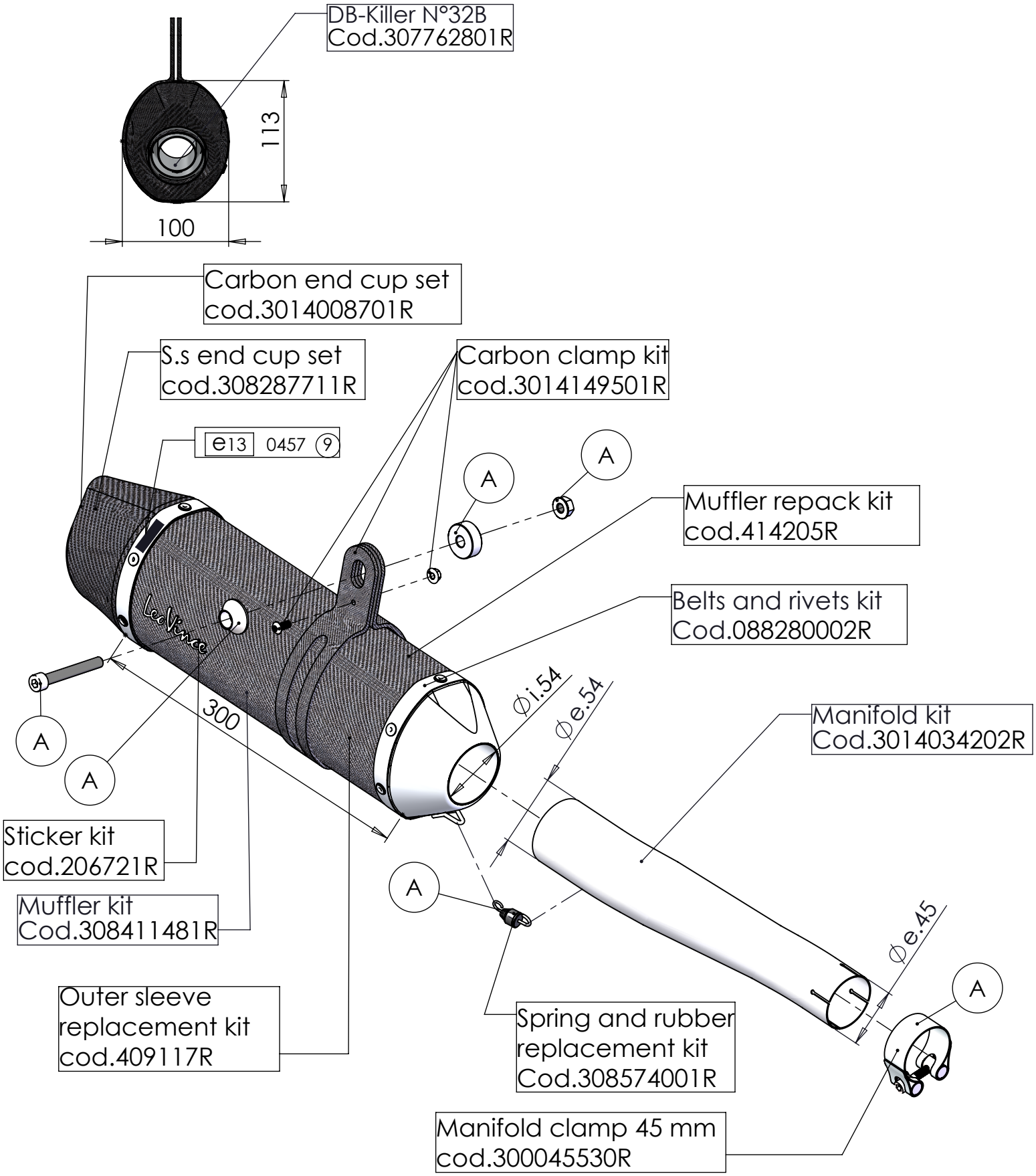

ART. 14160E - SPARE PARTS

HONDA CB 500 F - CBR 500 R

Ⓐ FITTING KIT cod.3014034601R