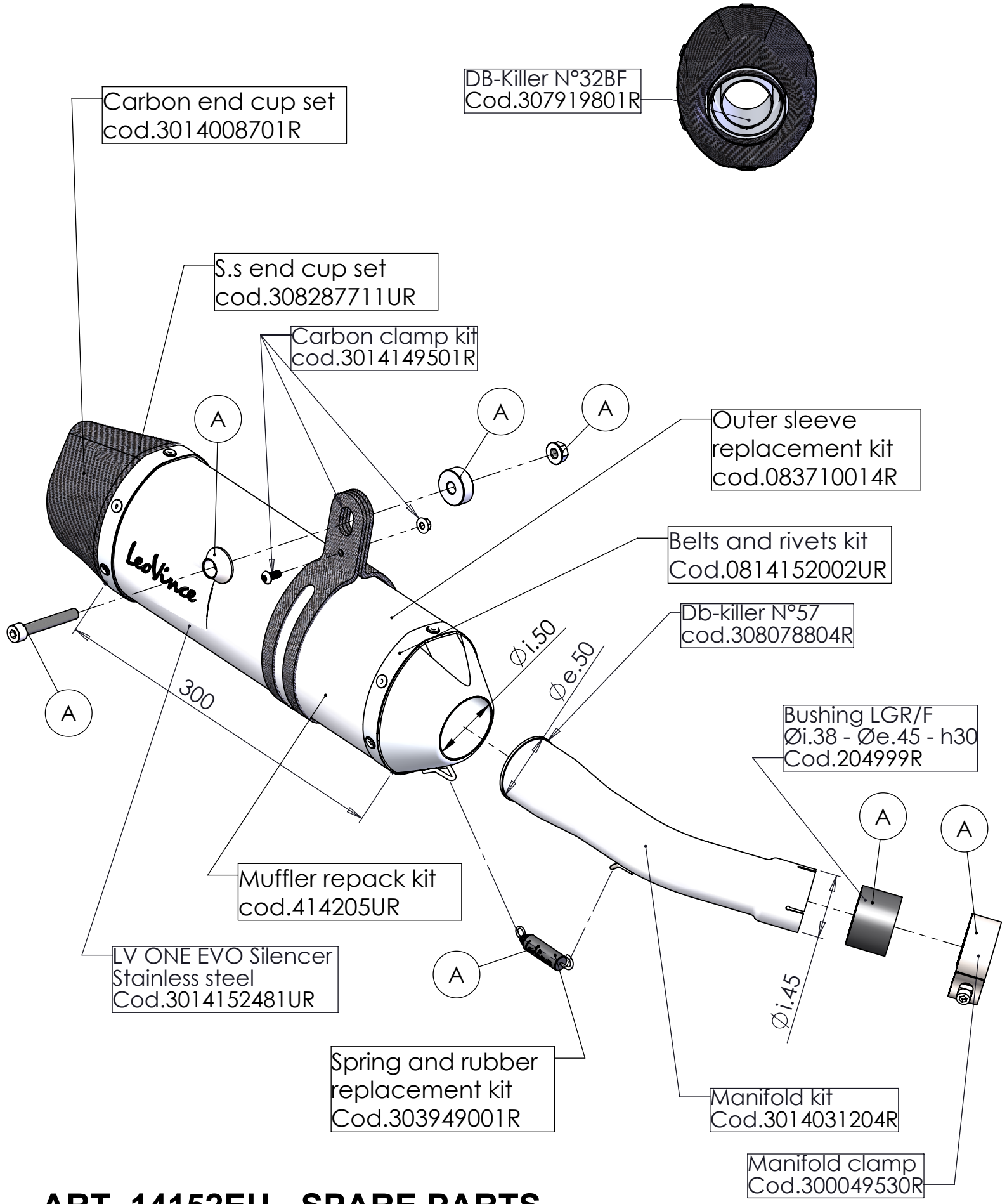

ART. 14152EU - SPARE PARTS

SUZUKI SV 650 ABS / SV 650 X ABS (Also fits 35kW versions)

Ⓐ FITTING KIT cod.3014031601R