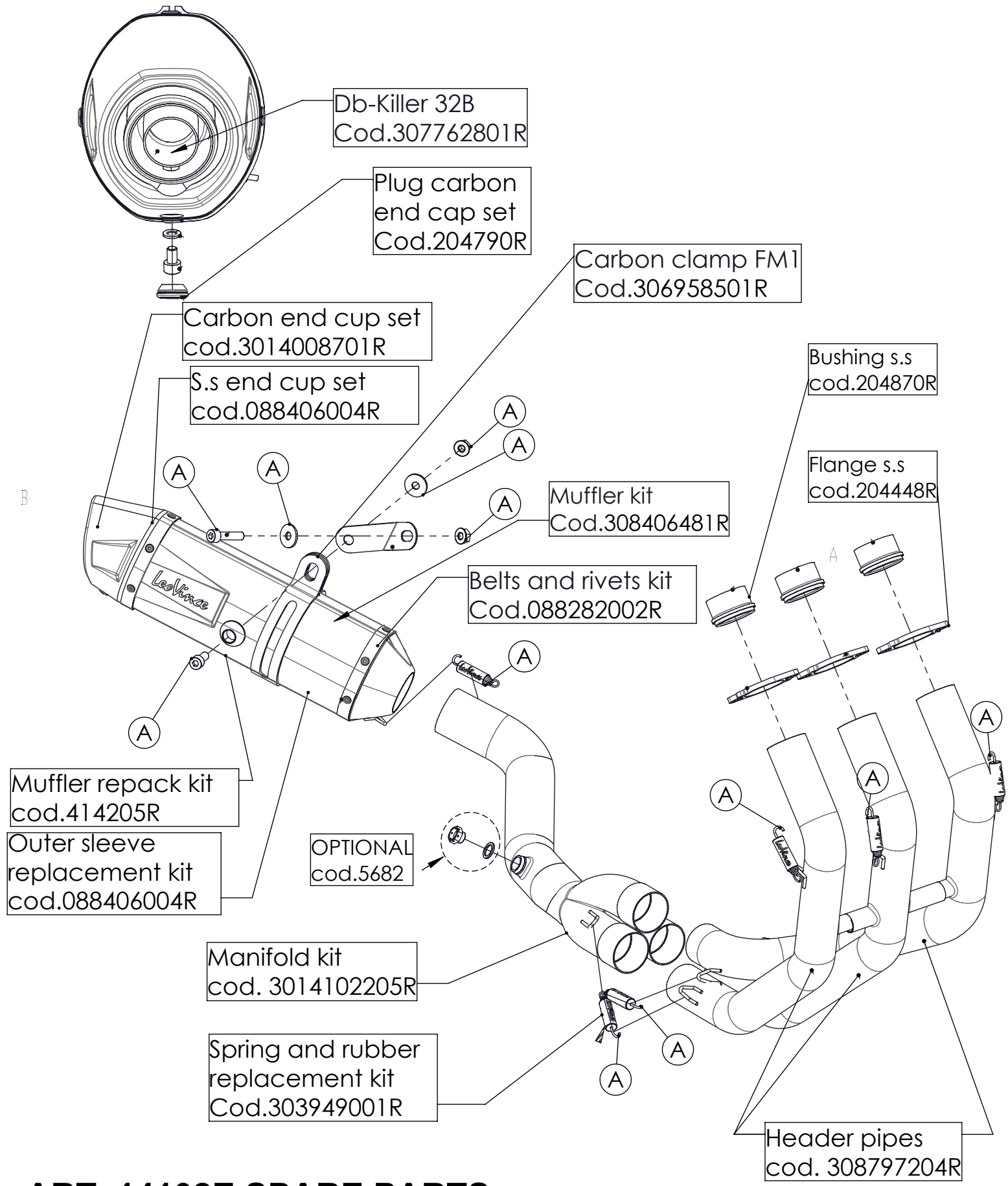

ART. 14102E SPARE PARTS

YAMAHA MT 09 TRACER i.e

Ⓐ FITTING KIT cod.3014102601