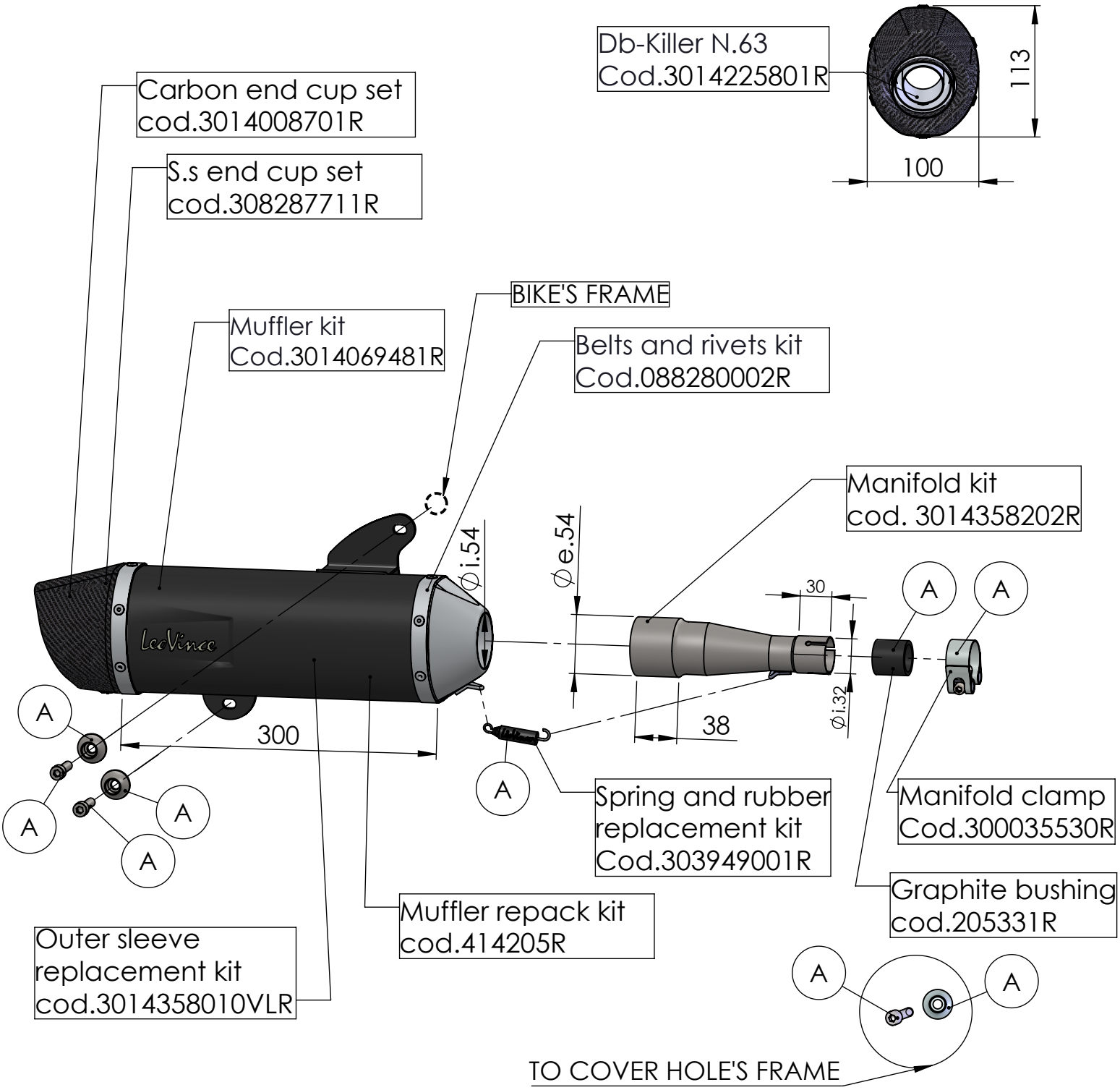

ART. 14069 - SPARE PARTS

PIAGGIO VESPA GTS 125 / 150 i.e

Ⓐ FITTING KIT cod. 3014358601R