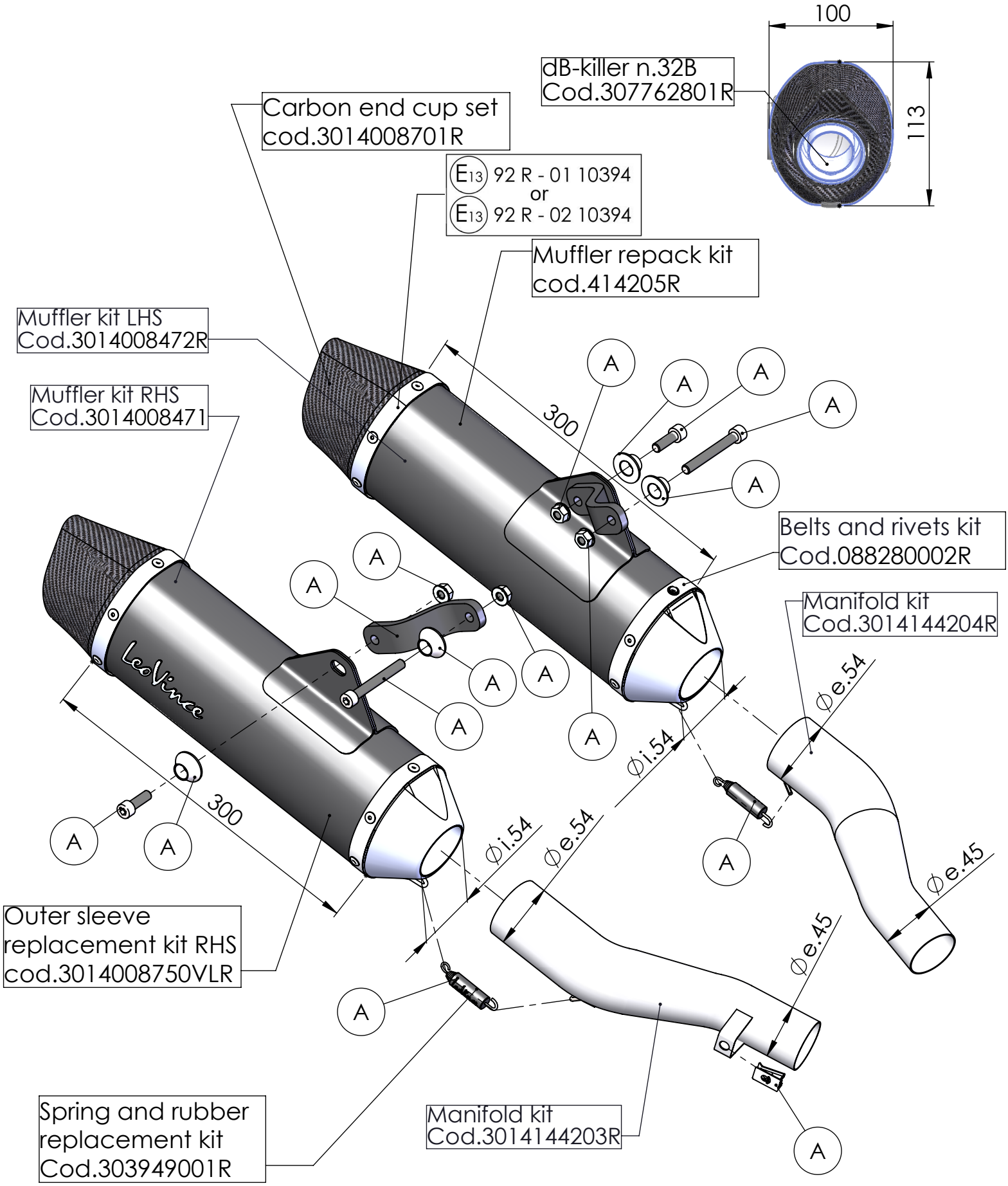

ART. 14049 - SPARE PARTS

KAWASAKI Z1000 / Z1000SX / NINJA 1000 / ABS (US only)
(Fits with original panniers)

Ⓐ FITTING KIT cod.303014144601R