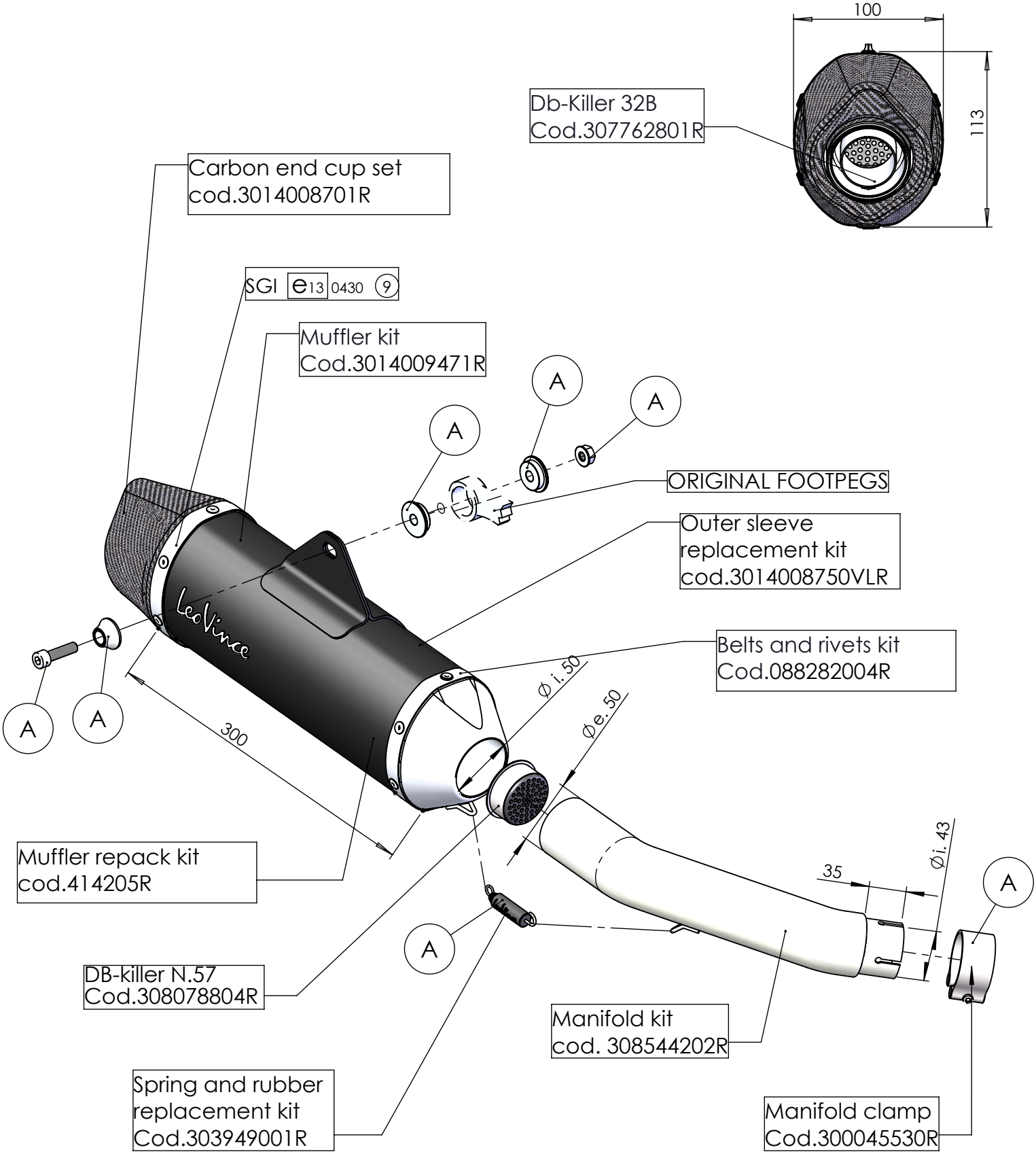

ART.14010 SPARE PARTS

SUZUKI GSR 750 i.e.

Ⓐ FITTING KIT cod.308544601R